025TC

ECN # or INIT	REV	DESCRIPTION	DATE
	A1	REDRAWN TO CAD	16-SEP-2014

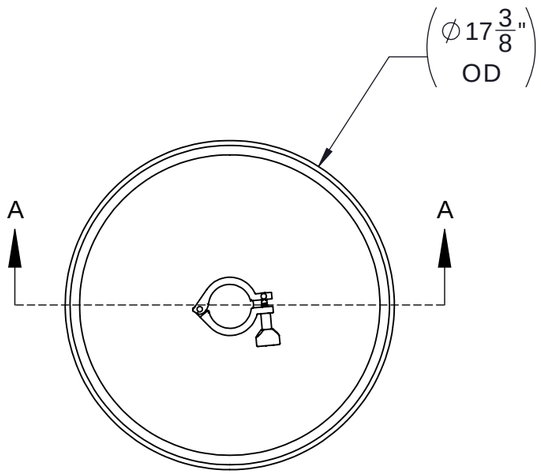

SECTION A-A

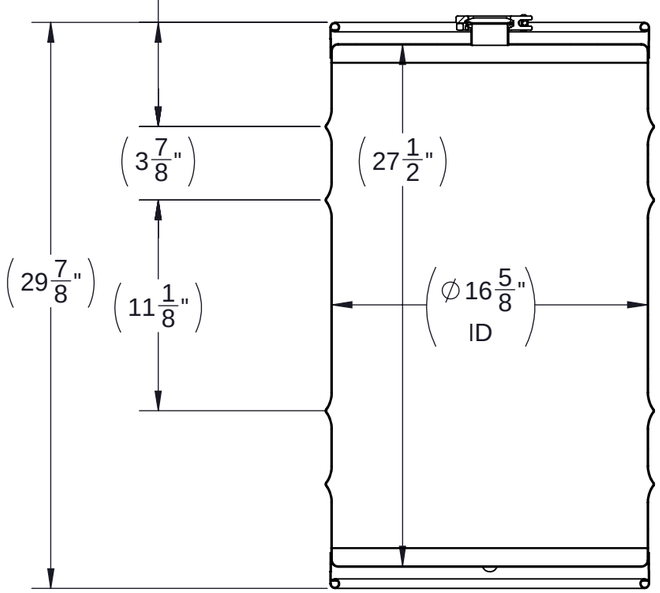

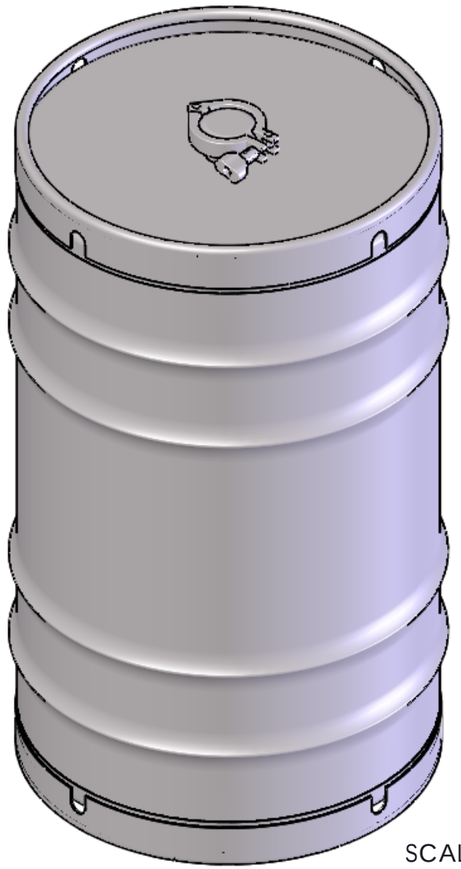

SCALE
1:6

TARE WEIGHT:
37 lbs

BEST PRINTED ON B-SIZE PAPER

MAT'L	DRW	CHK	UNLESS STATED OTHERWISE	SKOLNIK INDUSTRIES, INC.
DRUM: 16GA 304SS-2B FITTING: 304SS	LJT	JG	*(DIMENSIONS IN PARENTHESIS ARE FOR REFERENCE ONLY!!!)*	4900 SOUTH KILBOURN AVENUE, CHICAGO, IL 60632
	SLS DR	QA MD	ALL DIMENSIONS ARE IN INCHES DO NOT SCALE DRAWING (SCALE = 1:8)	DESCRIPTION 25 GALLON TIGHT HEAD DRUM 2in TRI-CLOVER FITTING IN TOP CENTER STAINLESS STEEL
THE USE OF INFORMATION CONTAINED HEREIN IS RESTRICTED FOR THE BENEFIT OF SKOLNIK INDUSTRIES ONLY. UNAUTHORIZED USE OR DISCLOSURE, COPYING OR OTHERWISE REPRODUCING (IN ANY MANNER) ANY PORTION OF THIS DRAWING WITHOUT PRIOR WRITTEN PERMISSION OF AN AUTHORIZED OFFICIAL OF SKOLNIK INDUSTRIES IS STRICTLY PROHIBITED.	APR Reza Tanha		TOLERANCES: FRACTIONS Ñ1/4	
	FILE CREATED IN SolidWorks		3RD	REL. DATE 16-SEP-2014 / PART NUM. / FILENAME 025TC / REV A1